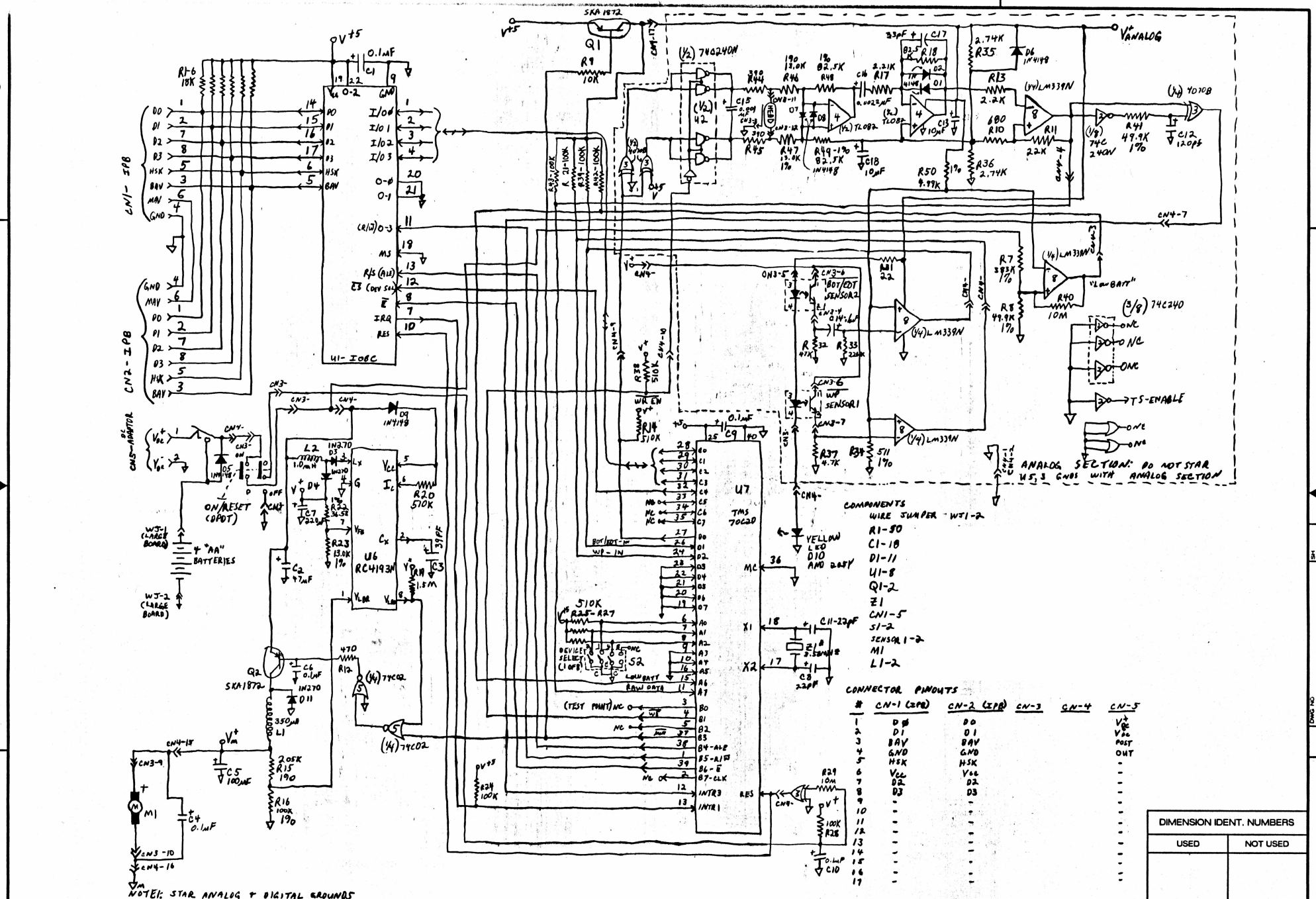
U1- IOBC
U6 RC4193N
U7 TMS 7002D
Q1 SKA1872
Q2 SKA1872
CN1- IPB
CN2- IPB
ON/RESET (DPDT)
"AA" BATTERIES
ANALOG SECTION: DO NOT STAR W/ 3 GNDS WITH ANALOG SECTION
"LOW BATT"
TS-ENABLE
YELLOW LED D10 AND 2051
COMPONENTS
WIRE JUMPER - WJ1-2
R1-50
C1-18
D1-11
U1-8
Q1-2
Z1
CN1-5
S1-2
SENSOR 1-2
M1
L1-2
CONNECTOR PINOUTS
CN-1 (IPB) CN-2 (IPB) CN-3 CN-4 CN-5
1 D0 D0 V+
2 D1 D1 Vbe
3 BAV BAV POST
4 GND GND OUT
5 HSK HSK -
6 Vcc Vcc -
7 D2 D2 -
8 D3 D3 -
9 - - -
10 - - -
11 - - -
12 - - -
13 - - -
14 - - -
15 - - -
16 - - -
17 - - -
NOTE1: STAR ANALOG + DIGITAL GROUNDS
NOTE2: MUST ACCOMODATE EITHER A CERAMIC RESONATOR OR A 3.58 MHZ COLOR BURST CRYSTAL.
NOTE3: ALL RESISTORS 5% UNLESS OTHERWISE MARKED
NOTE: ALL R
DIMENSION IDENT. NUMBERS
USED
NOT USED
TEXAS INSTRUMENTS INCORPORATED LUBBOCK, TEXAS
DWN J.M. ROBINSON
DATE 9/22/82
ISSUE DATE 9/23/82
SIZE C
FSCM NO
DRAWING NO MICROTAPE
REV
SCALE
SHEET

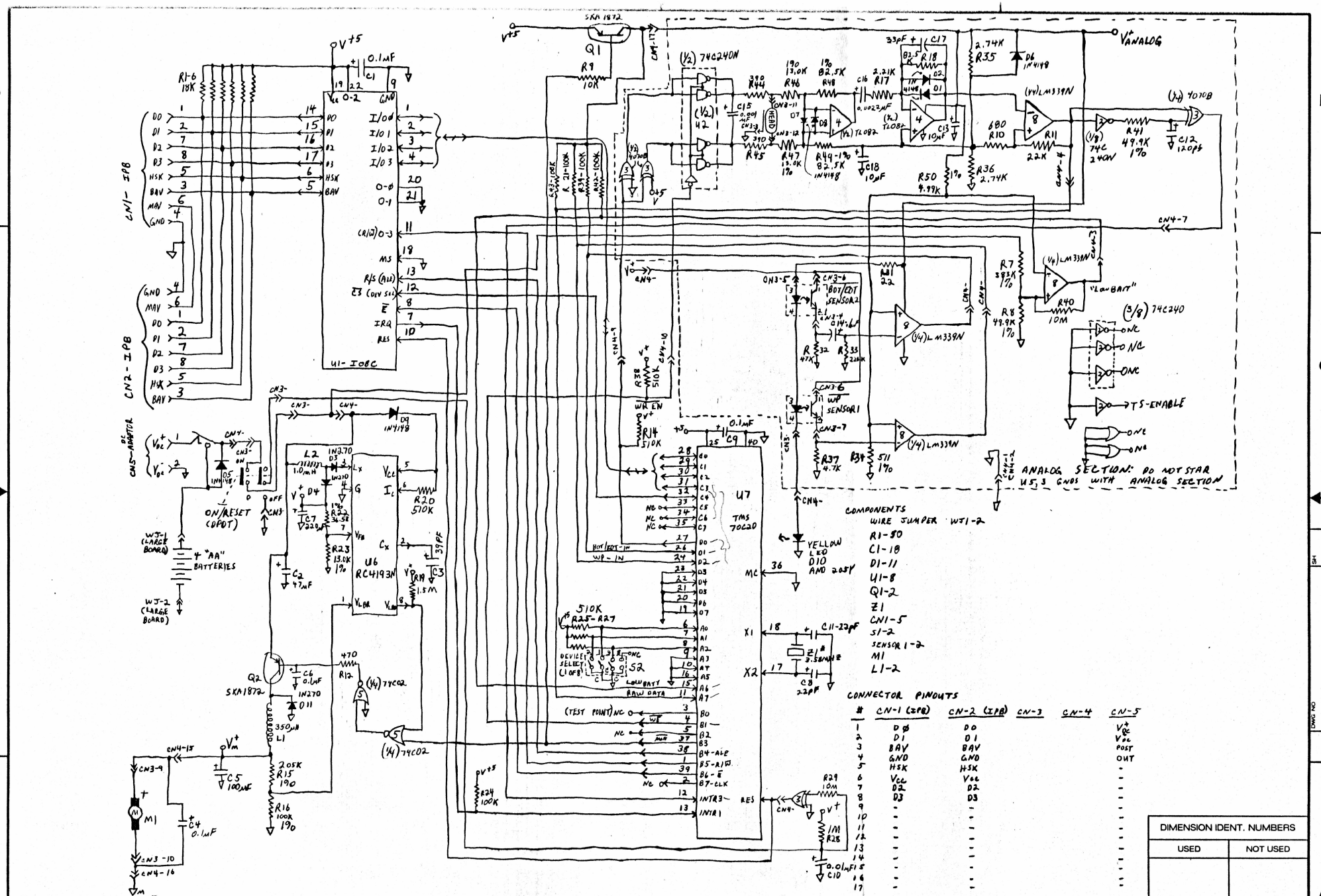
U1-IOBC
U6 RC4193N
U7 TMS 70C20
Q1 SKA1872
Q2 SKA1872
CN1-IPB
CN2-IPB
CN5-ADAPTOR
ON/RESET (DPDT)
"AA" BATTERIES
WJ-1 (CHARGE BOARD)
WJ-2 (CHARGE BOARD)
M1
L1 350μH
L2 1.0mH
ANALOG SECTION: DO NOT STAR USE 3 GNDS WITH ANALOG SECTION
"LOW BATT"
TS-ENABLE
YELLOW LED D10 AND 205Y
Z1 3.58MHZ
S2
COMPONENTS
WIRE JUMPER WJ1-2
R1-50
C1-18
D1-11
U1-8
Q1-2
Z1
CN1-5
S1-2
SENSOR 1-2
M1
L1-2
CONNECTOR PINOUTS
CN-1 (IPB) CN-2 (IPB) CN-3 CN-4 CN-5
1 D0 D0 VDC
2 D1 D1 VDC
3 BAV BAV POST
4 GND GND OUT
5 HSK HSK -
6 VCC VCC -
7 D2 D2 -
8 D3 D3 -
9 - - -
10 - - -
11 - - -
12 - - -
13 - - -
14 - - -
15 - - -
16 - - -
17 - - -
NOTE1: STAR ANALOG + DIGITAL GROUNDS
*NOTE2: MUST ACCOMODATE EITHER A CERAMIC RESONATOR OR A 3.58 MHZ COLOR BURST CRYSTAL.
NOTE3: ALL RESISTORS 5% UNLESS OTHERWISE MARKED
NOTE: ALL R
DIMENSION IDENT. NUMBERS
USED NOT USED
TEXAS INSTRUMENTS INCORPORATED LUBBOCK, TEXAS
DWN J.M. ROBINSON DATE 9/27/82
ISSUE DATE 9/2/82
SIZE C
DRAWING NO MICROTAPE
REV
SCALE
SHEET

18 PINS / FOR TOTAL SYSTEM CONTROL

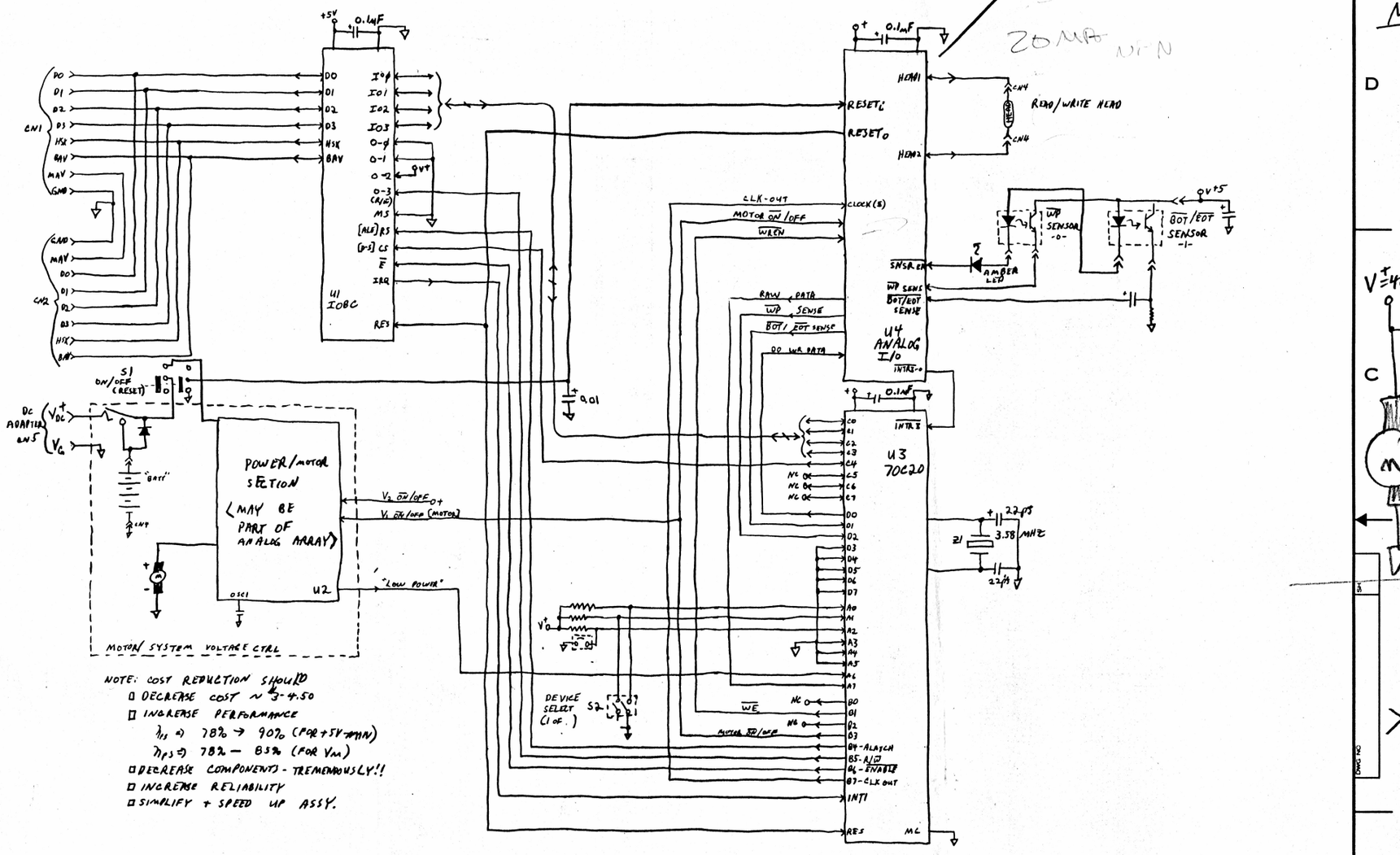

NOTE: COST REDUCTION SHOULD
- DECREASE COST ~ $3-4.50
- INCREASE PERFORMANCE
  - $\eta_{LS} \Rightarrow$ 78% → 90% (FOR +5V ONLY)
  - $\eta_{PS} \Rightarrow$ 78% — 85% (FOR V_M)
- DECREASE COMPONENTS - TREMENDOUSLY!!
- INCREASE RELIABILITY
- SIMPLIFY + SPEED UP ASSY.

DIMENSION IDENT. NUMBERS	
USED	NOT USED

TEXAS INSTRUMENTS INCORPORATED LUBBOCK, TEXAS	DWN JIM ROBINSON	DATE 9/29/82	SIZE C	DRAWING NO MICROTAPE COST REDUCTION -
			SCALE	SHEET

MOTOR CONTROL

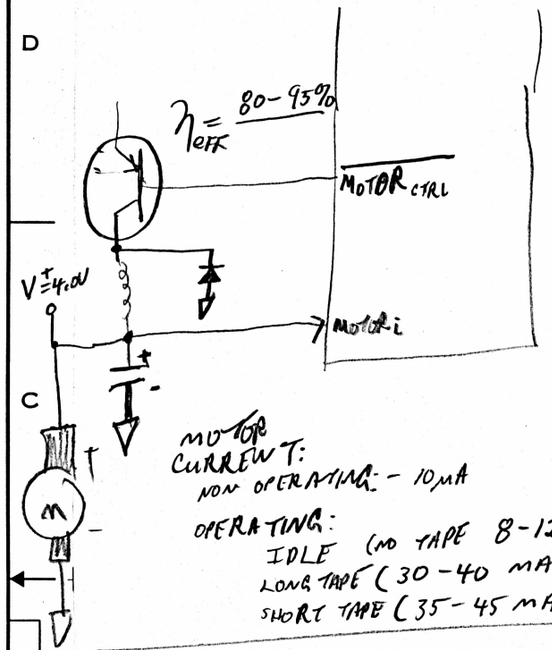

MOTOR CURRENT:
NON OPERATING: - 10 mA
OPERATING:
IDLE (NO TAPE 8-12 mA)
LONG TAPE (30-40 mA)
SHORT TAPE (35-45 mA)

+5V control (NOT NECESSARILY ~~IMPLEMENT~~ IMPLEMENTED

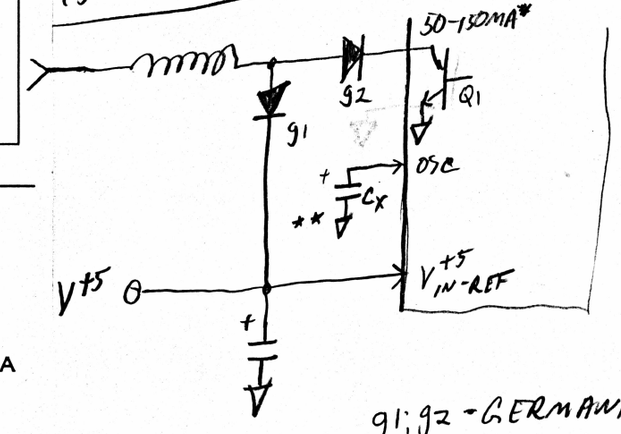

g1; g2 - GERMANIUM
g2 = REVERSE VOLTAGE PROTECTION

* MAY BE OUTSIDE PACKAGE (Q1)
** C_x MAY BE DONE INTERNALLY TO CHIP